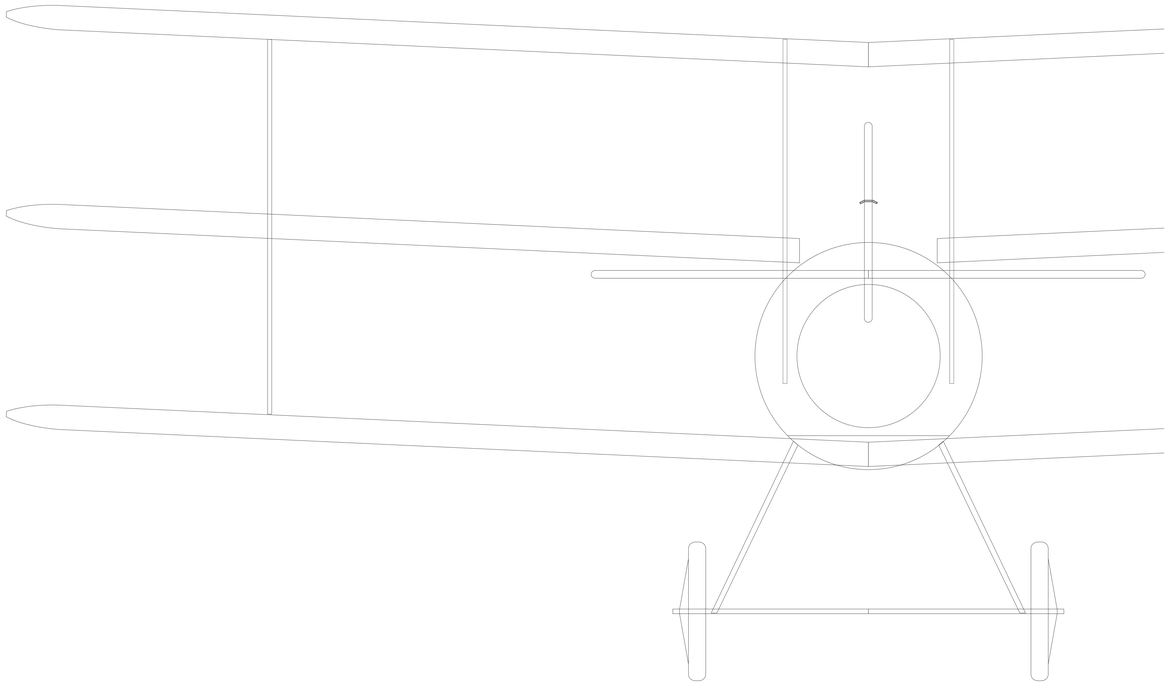

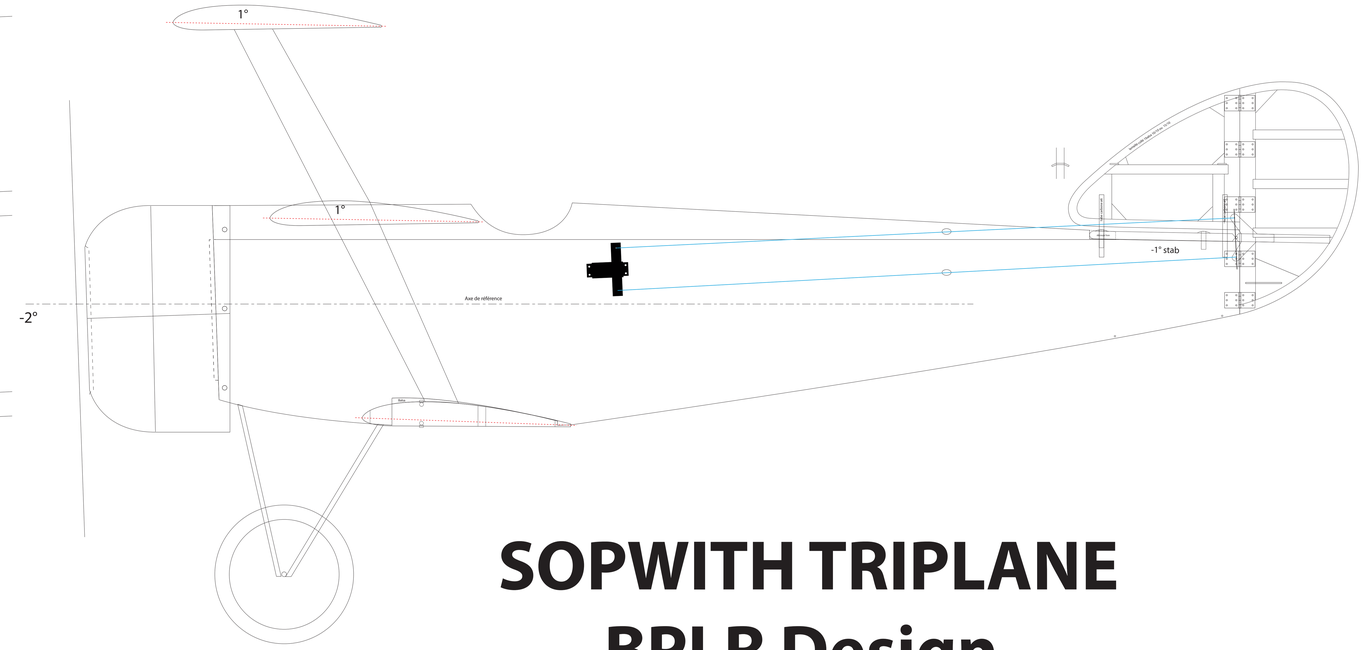
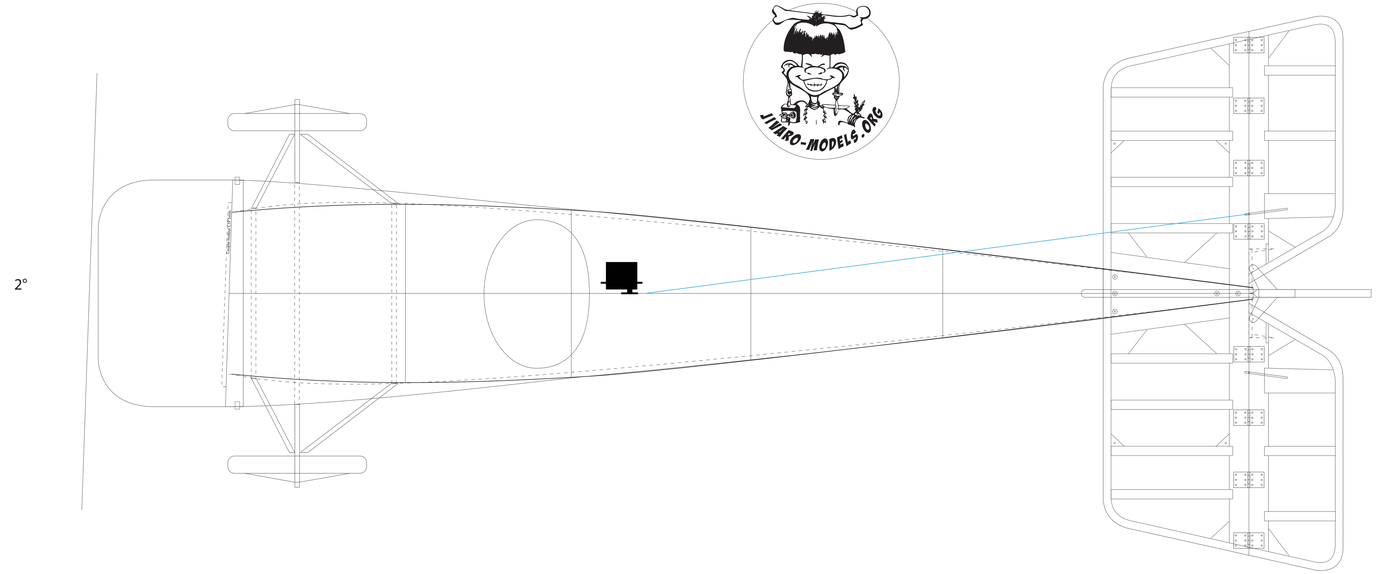
SOPWITH TRIPLANE
BPLR Design
2014