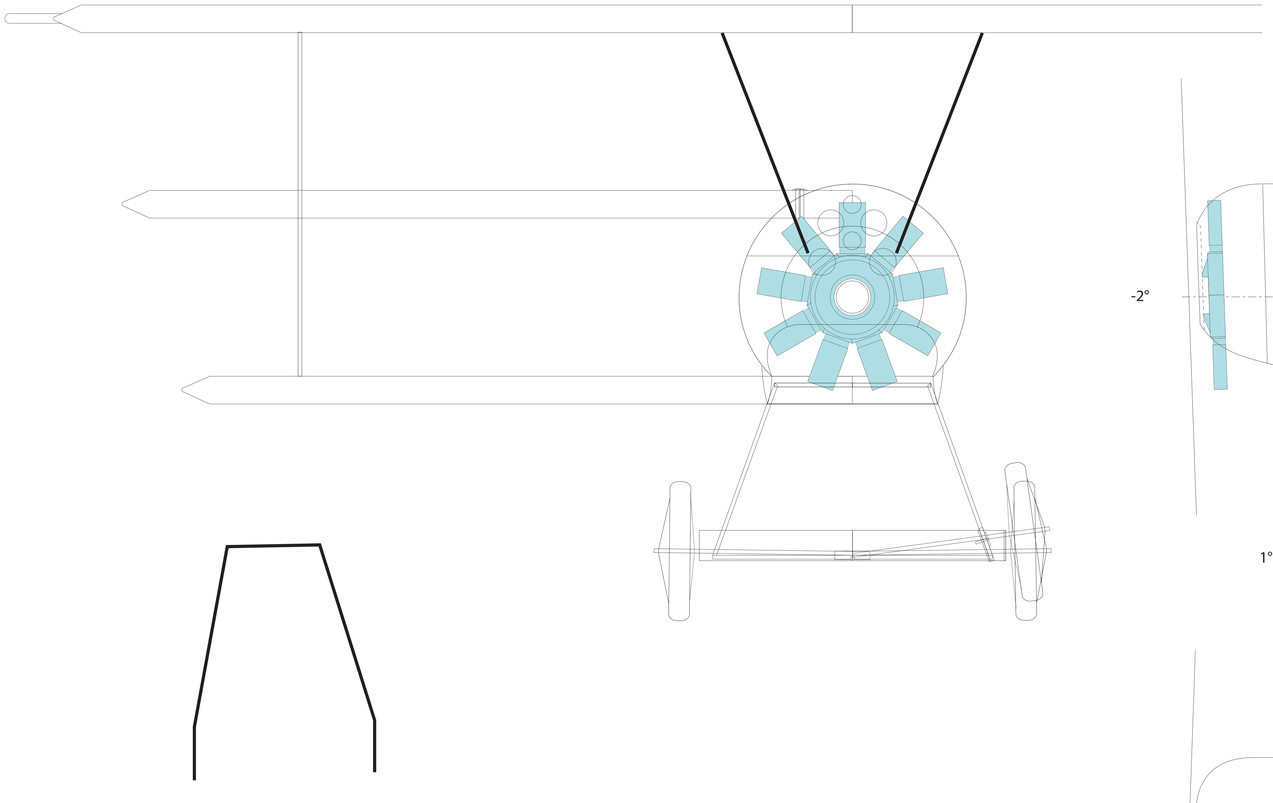

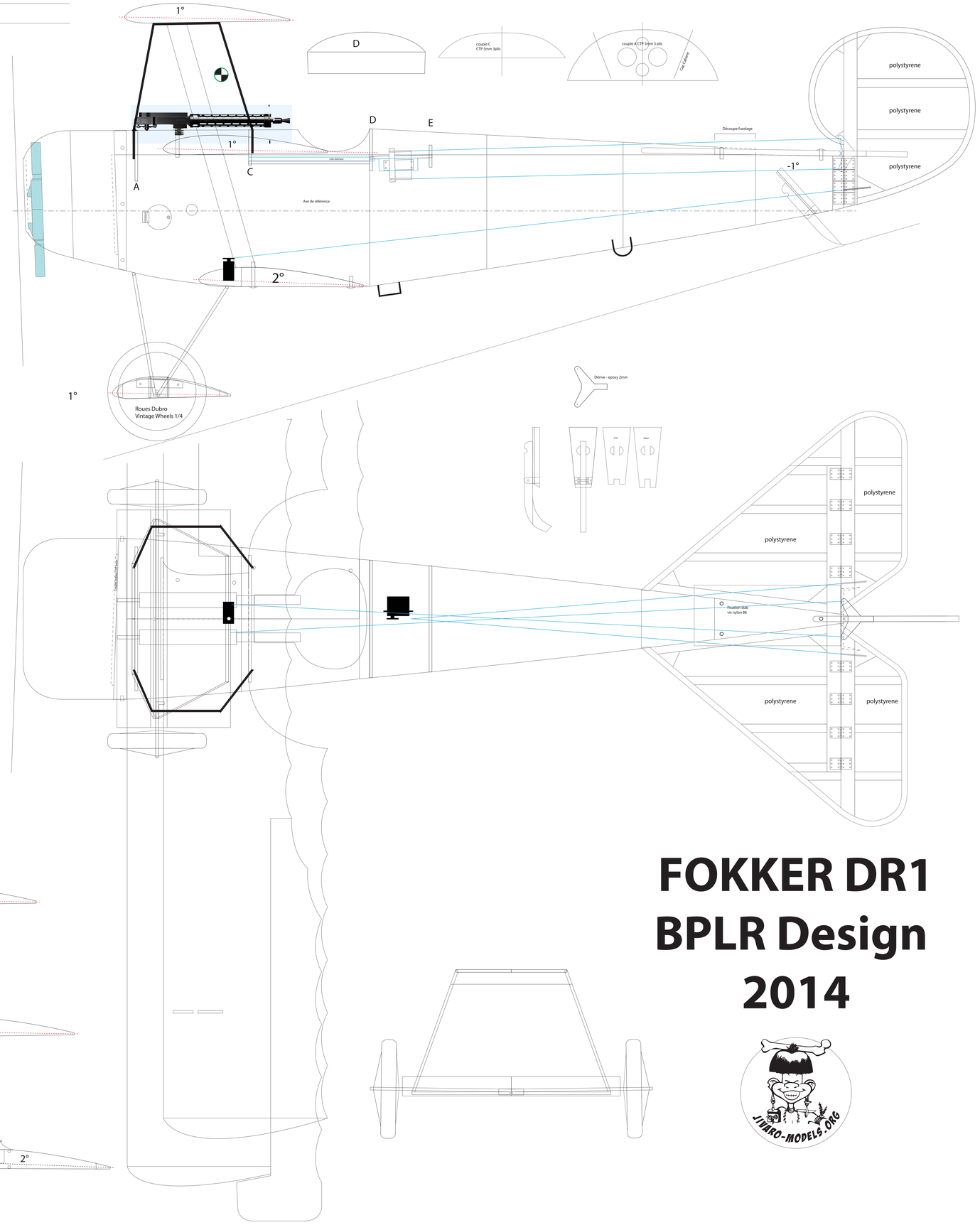

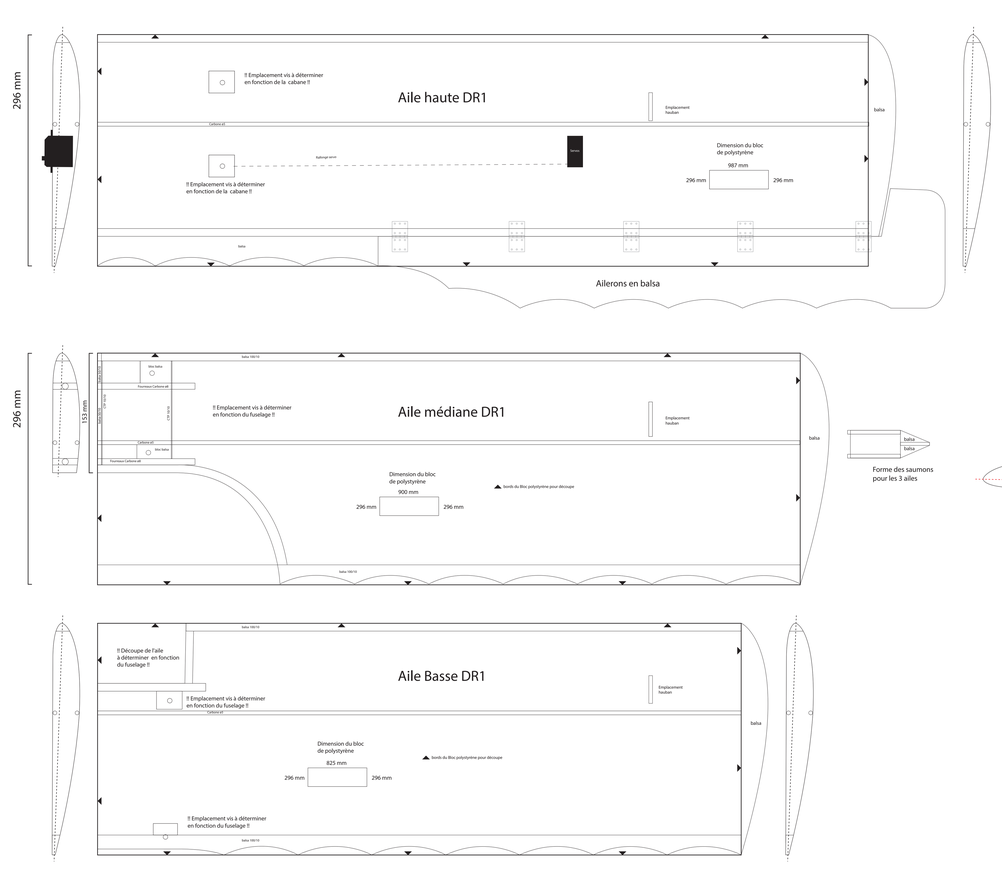

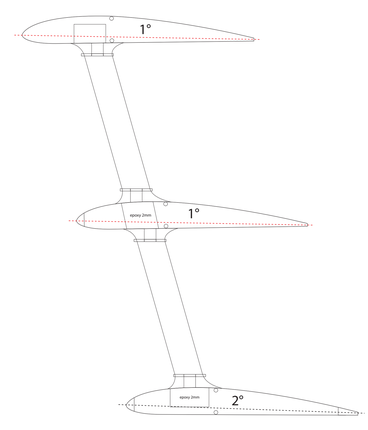

FOKKER DR1
BPLR Design
2014