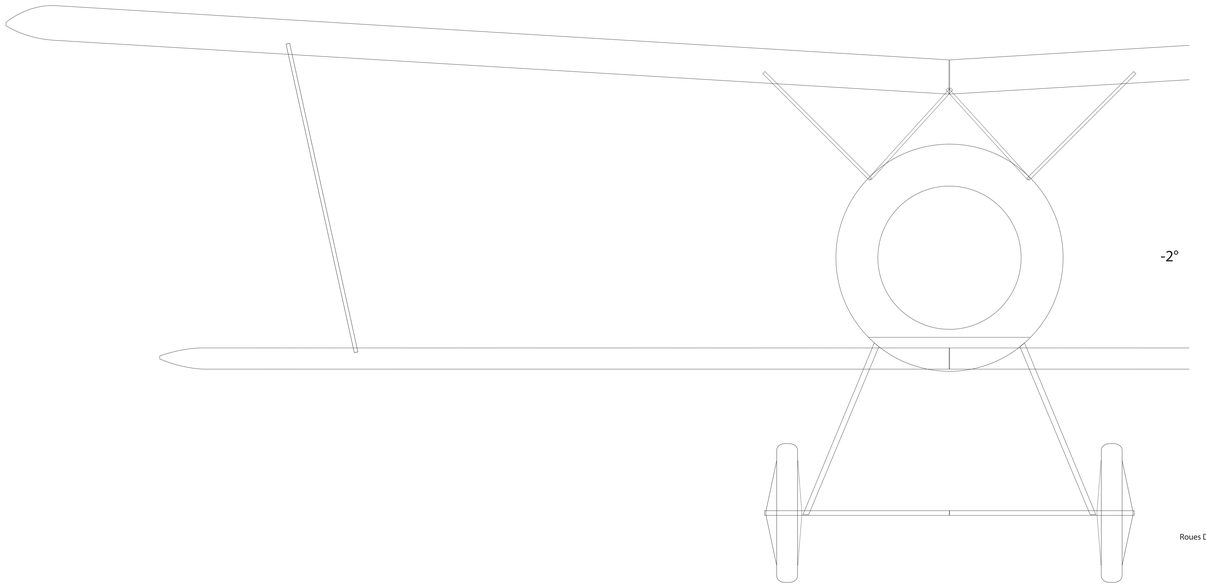

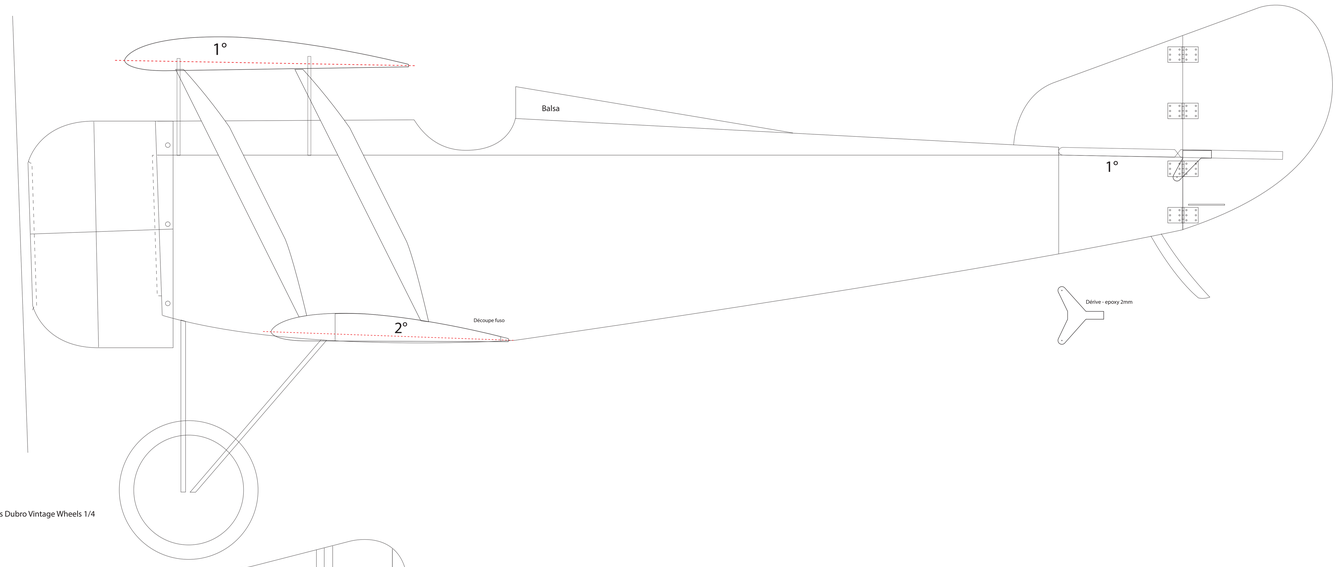
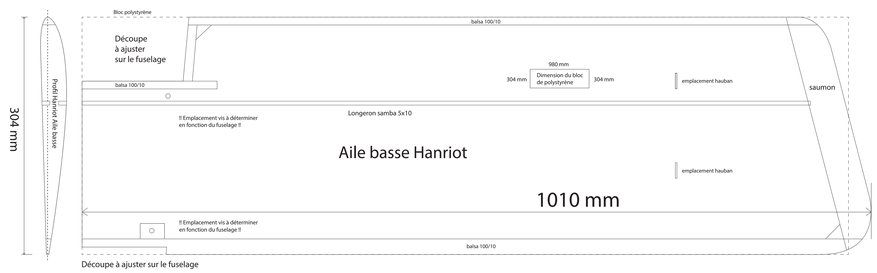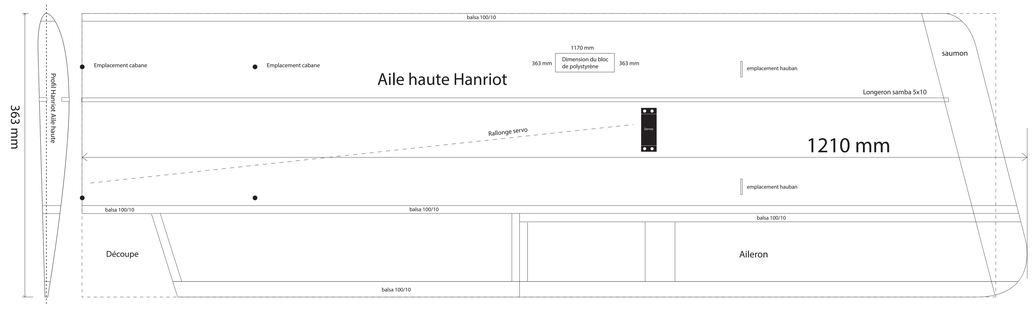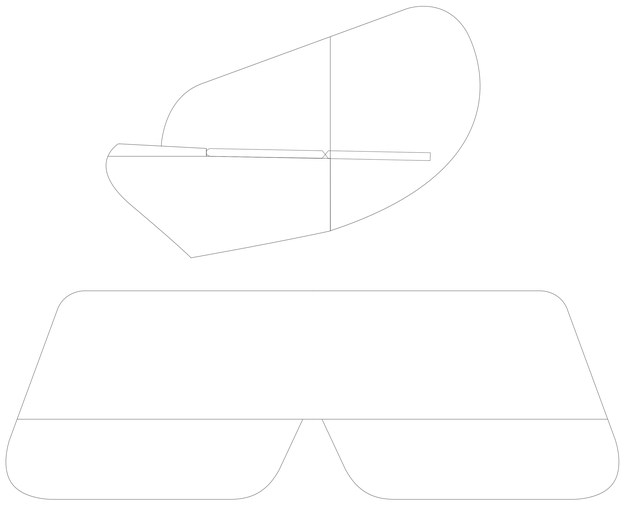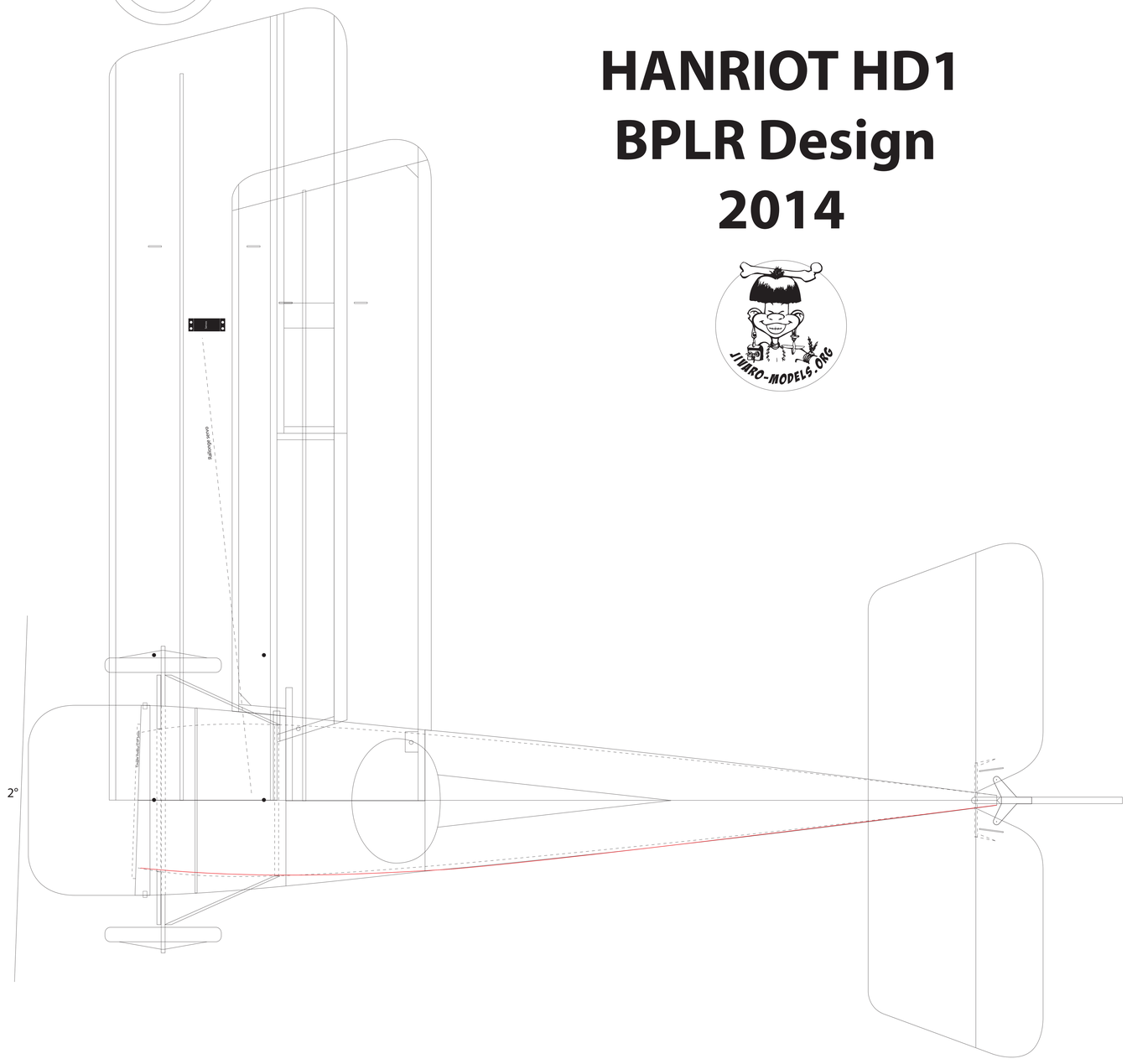
HANRIOT HD1
BPLR Design
2014